Revised 10-1-2005

MKC 18/24-S

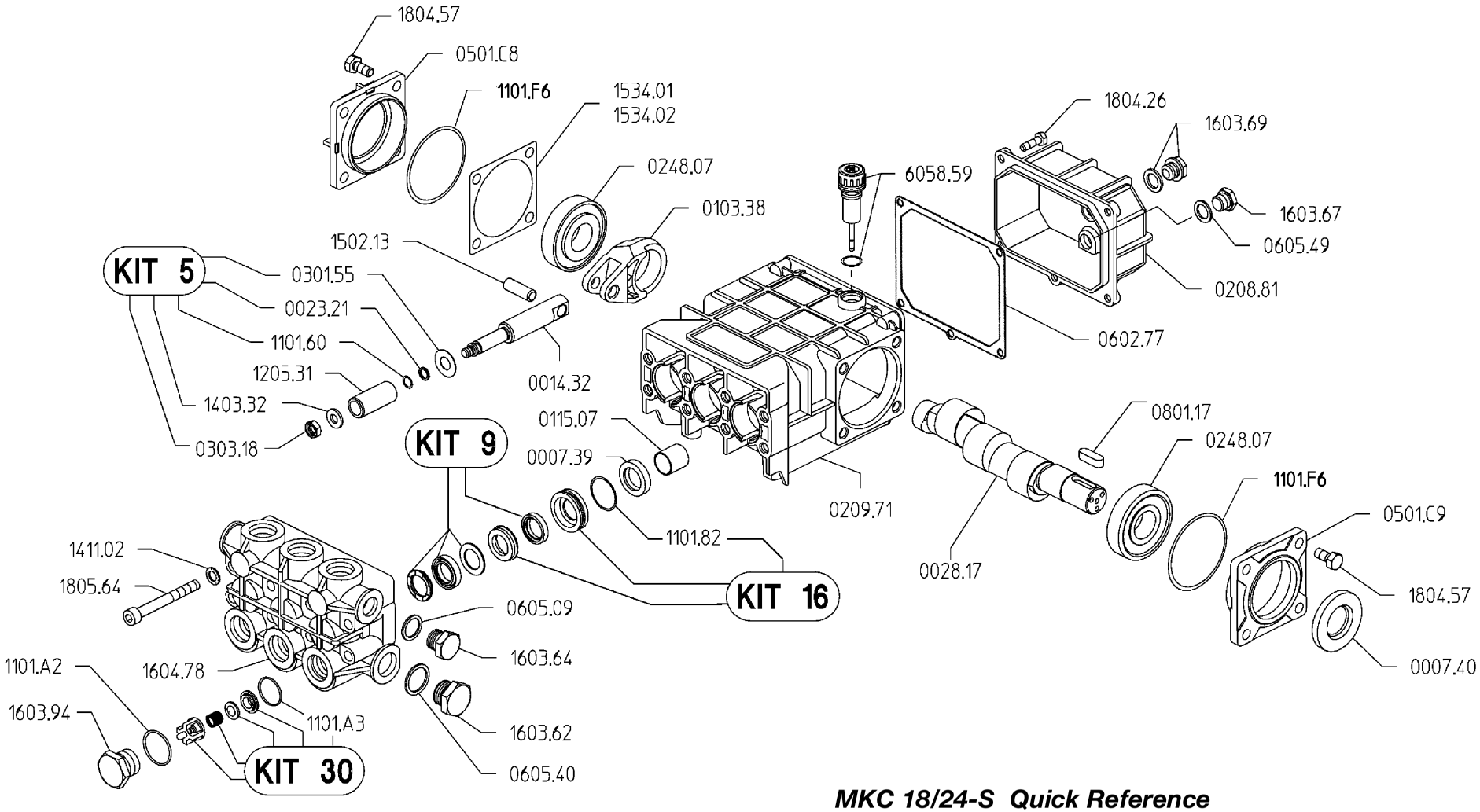

MKC 18/24-S Quick Reference

Maximum Flow .....5.0 GPM	Valve Kit 04-KIT UD-30
Maximum Pressure .....3500 PSI	Seal Kit.....04-KIT UD-9
Rated Pump Speed .....1450 RPM	Brass Kit 04-KIT UD-16
Oil Capacity.....28 oz. UDOR LUBE or SAE 30W Non-Detergent Oil	Plunger Bolt Kit 04-KIT UD-5
	Plunger Part #.....04-1205.31
	Plunger Diameter.....20 MM